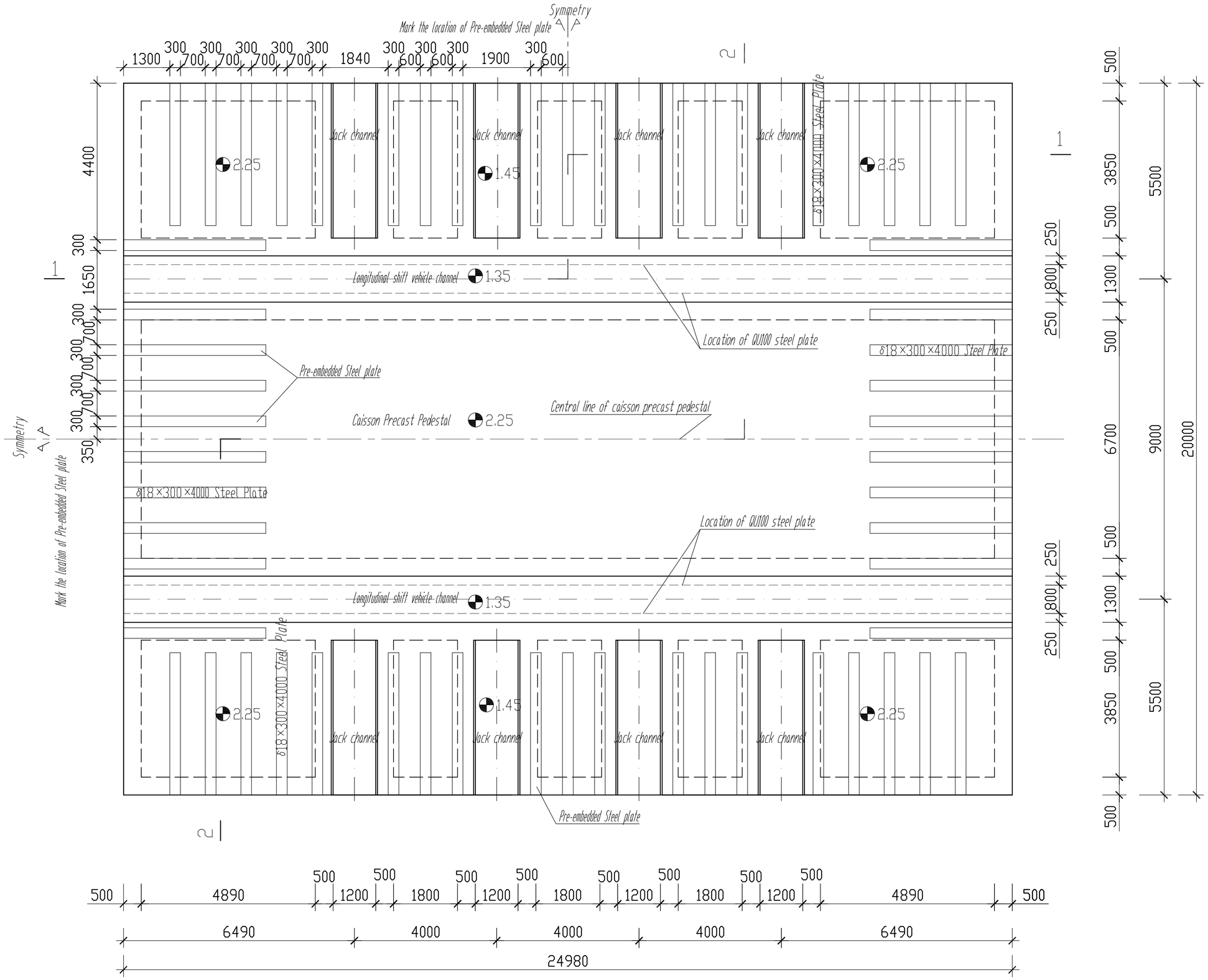


Structure Drawing of Typical Section of Caisson Precast Pedestal 1:75

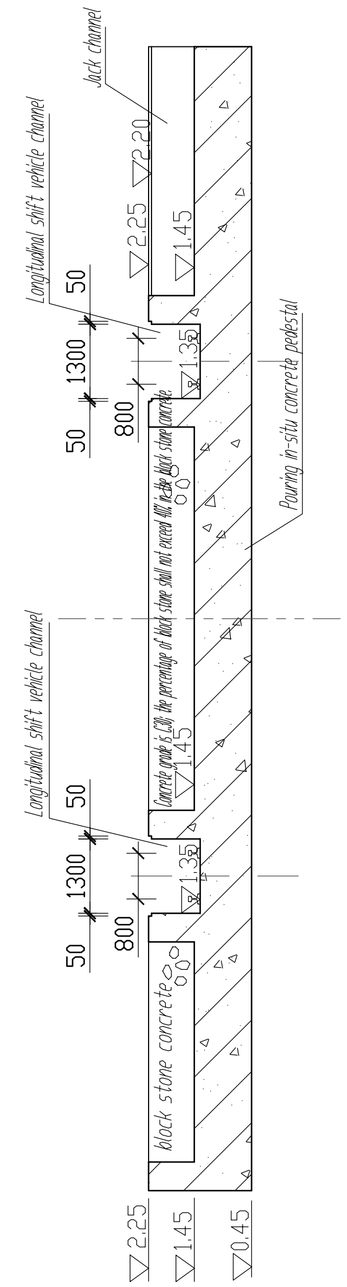


2-2 Section 1:75

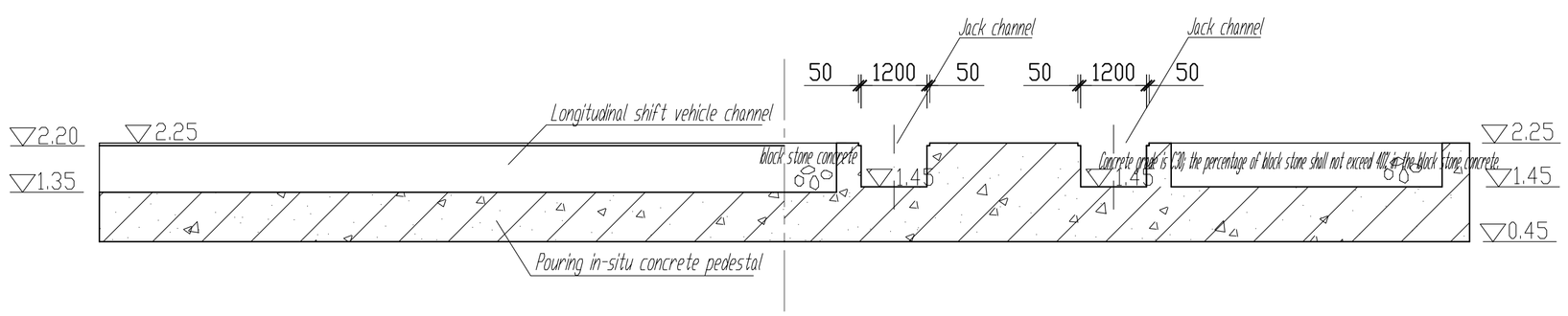


1-1 Section 1:75

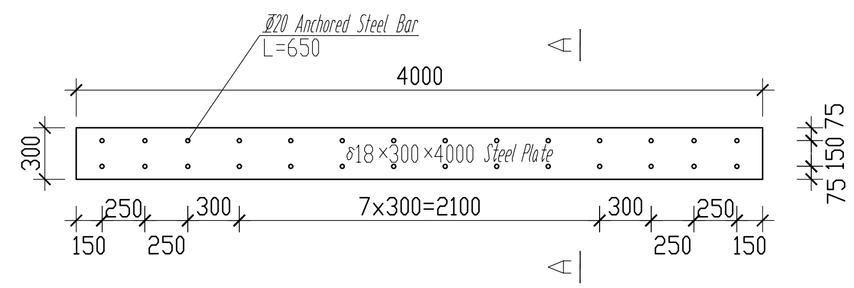


Detail of pre-embedded steel plate 1:25

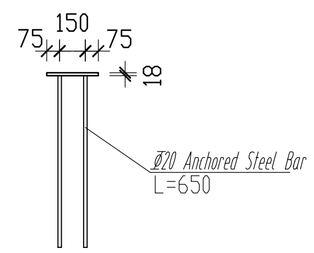


Detail of A-A 1:25

Note:

1. Dimensions in drawings are in millimeters,levels in drawings are in meters,levels are based on local seal level.
2. Concrete grade is C30; the percentage of block stone shall not exceed 40% in the block stone concrete.
3. Precast pedestal area of caisson is 20m wide and 150m long. There are total 6 pedestals with 24.98m long each. 2cm thick asphalt fiber board is filled in the joint of two adjacent pedestals.
4. Each of pre-embedded steel plate had 28 anchor bars,the method of T-welding and pressure submerged arc welding should be used in connection between the anchor bar and the pre- embedded steel plate.
5. In the top of caisson precast pedestal,the pre-embedded steel plates' location and size can be adjusted by the actual situation.

Tianjin Port Engineering Design and Consulting Ltd of China Communication Construction Company

| | | | | | | |
|---|---|---|---|---|---|---|
| Principal of Project | | Date | Project Name | Sudan Suakin Port International Container Terminal Phase1-Caisson Prefabricating Yard Project | Project NO. | GWY-08-110 |
| Approved By | | Date | | | Subdivision NO. | |
| Chief Designer | | Date | Project Subjects | | Phase | Shop Drawing |
| Checked By | | Date | | | Scale | See Drawing |
| Corrected By | | Date | | | | |
| Designed By | | Date | Drawing Name | Caisson Prefabrication Pedestal Structure Drawing | Drawing NO. | YZC-09 |
| Plotted By | | Date | | | | |