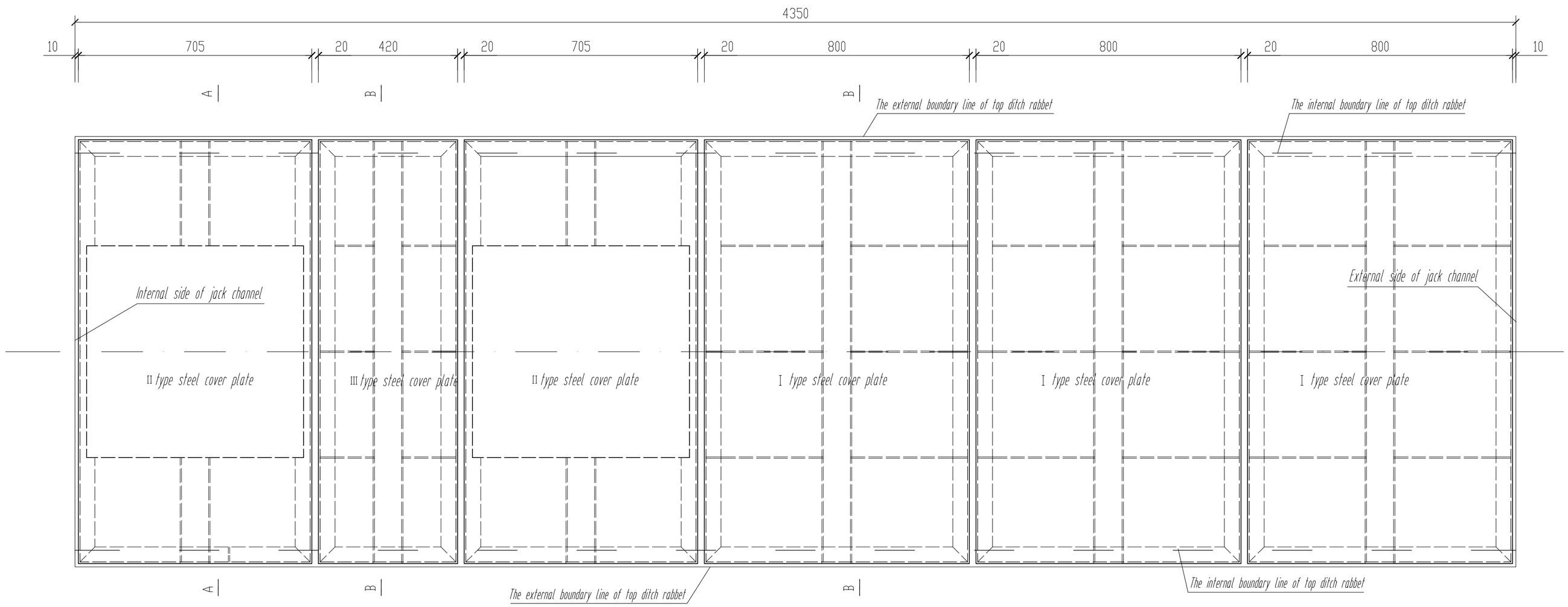


Cover Plate Installation Plan of No.1-8 Jack Channel

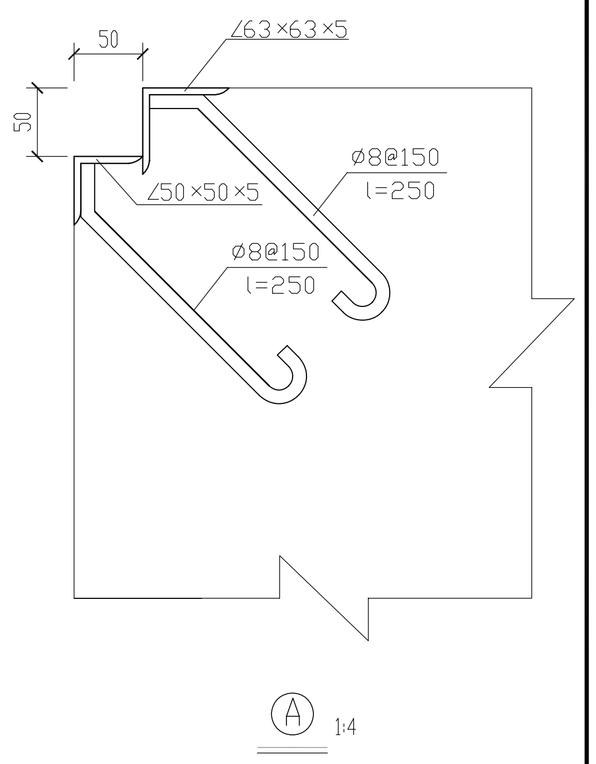


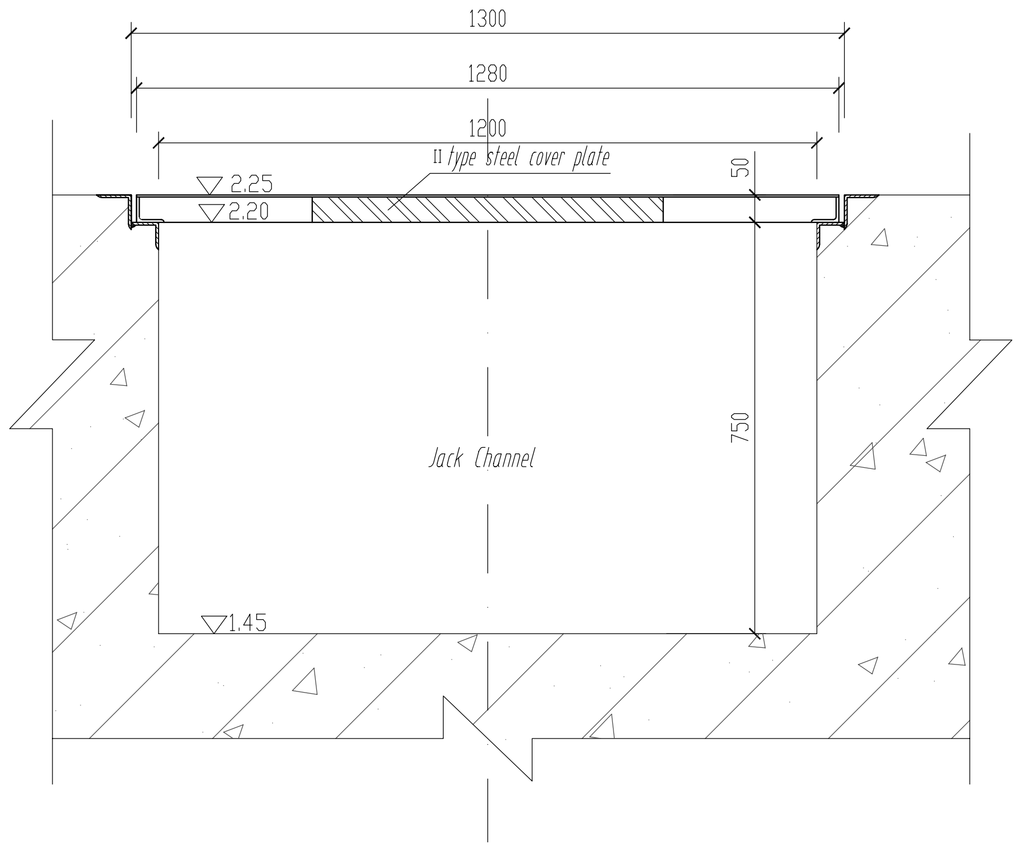


A-A

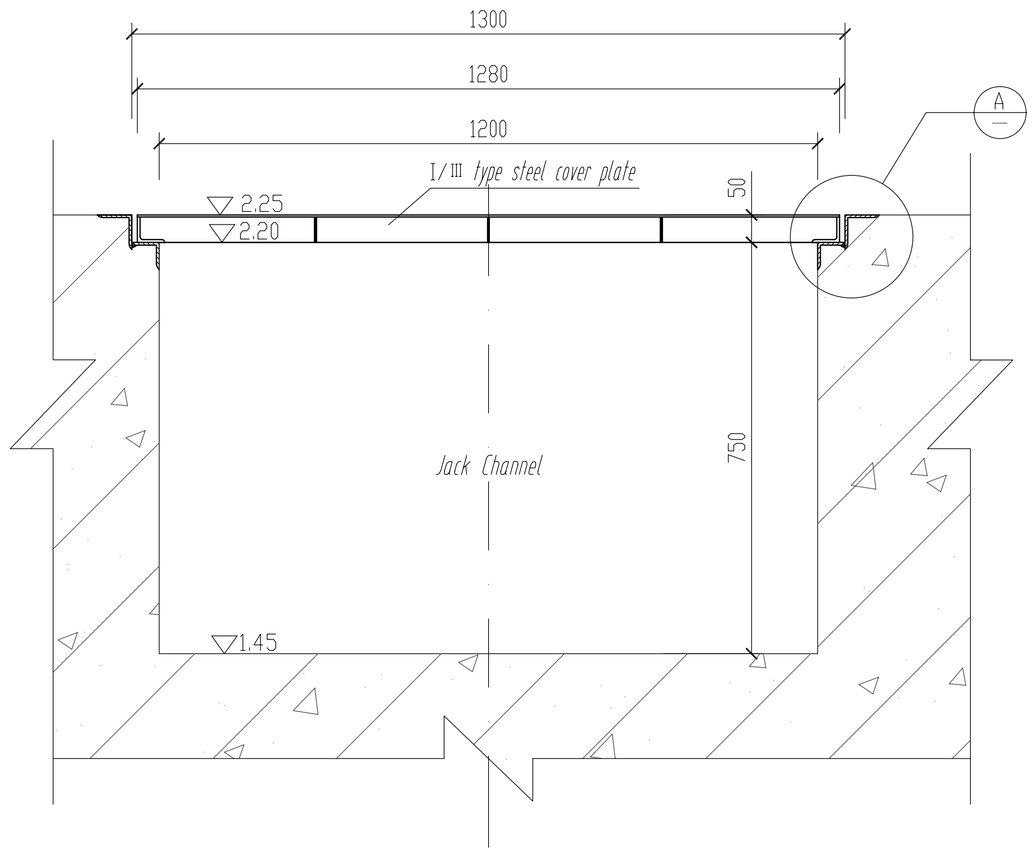


B-B

Technical Parameters

| | |
|---|---|
| Net width of jack channel | 1200mm |
| Length of each jack channel | 4350mm |
| Height of cover plate | 50mm |
| Groove ( width x height) | 50×50mm |

Note:
1. Dimensions in drawings are in millimeters, levels in drawings are in meters, levels are based on local seal level.
2.The cover plate structure is detailed in Cover Plate Structure Drawing of Longitudinal Shift Vehicle Channel and Lifting Jack Channel.
3.The actual location of lifting jack channel is detailed in Structure Drawing of Caisson Precast Pedestal.

Tianjin Port Engineering Design and Consulting Ltd of China Communication Construction Company

| | | | | | | |
|---|---|---|---|---|---|---|
| Principal of Project | | Date | Project Name | Suakin International Container Terminal Phase I-Slipway Project | Project NO. | GWY-08-110 |
| Approved By | | Date | | | Subdivision NO. | |
| Chief Designer | | Date | Project Subjects | | Phase | Shop Drawing |
| Checked By | | Date | | | Scale | 1:75 |
| Corrected By | | Date | | | | |
| Designed By | | Date | Drawing Name | Jack Channel Cover Plate Installation Drawing | Drawing NO. | YZC-12 |
| Plotted By | | Date | | | | |