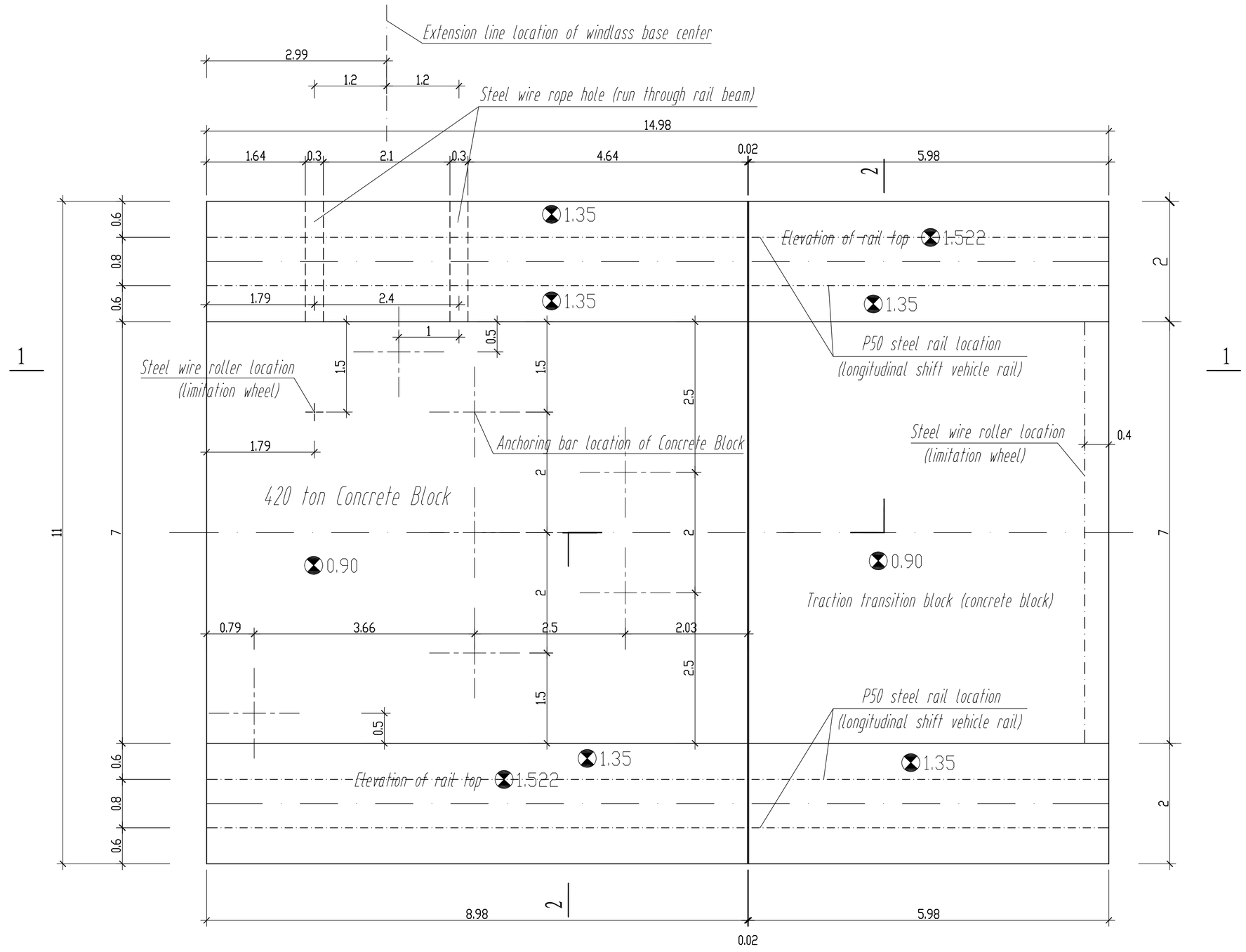

Traction Area Plan of Inclined Frame Vehicle

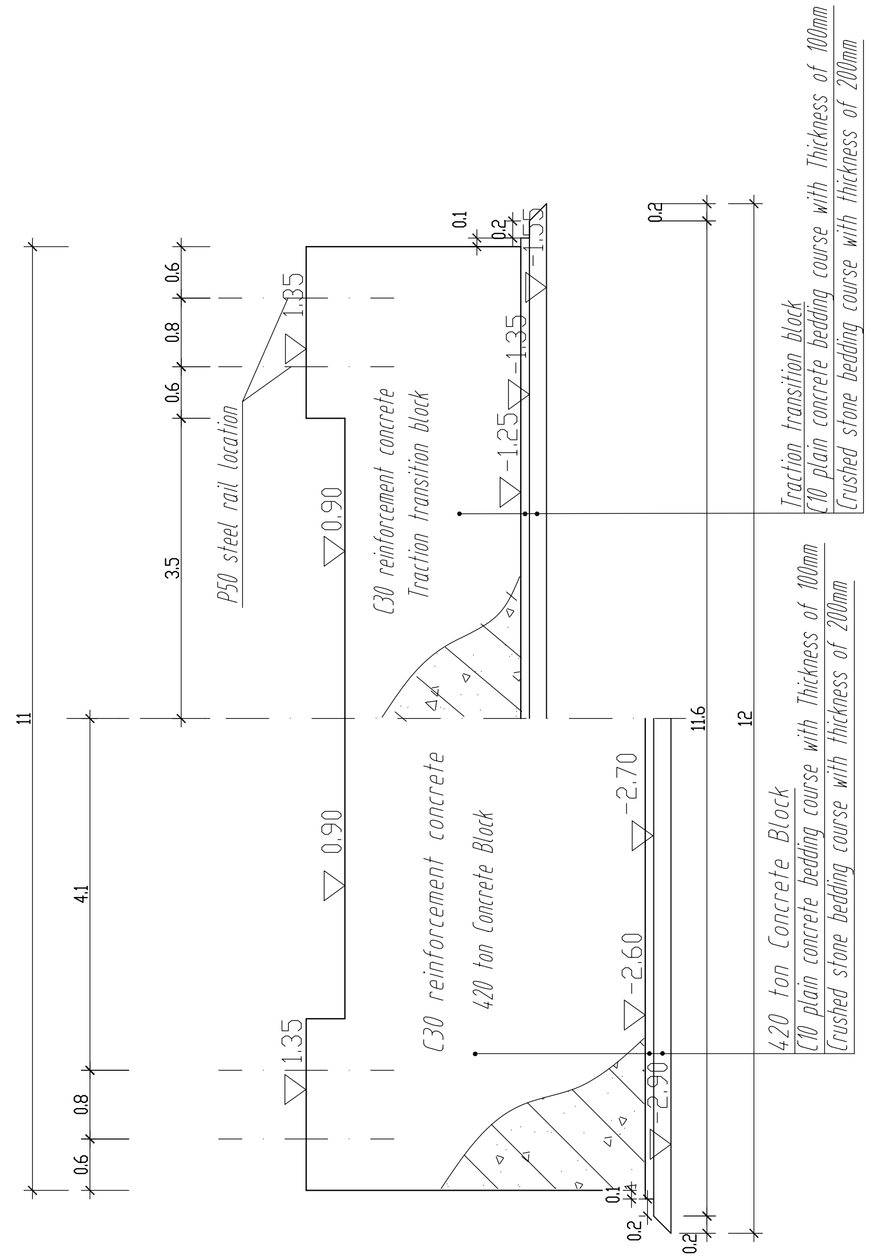

Section 2-2 of Traction Area Plan of Inclined Frame Vehicle

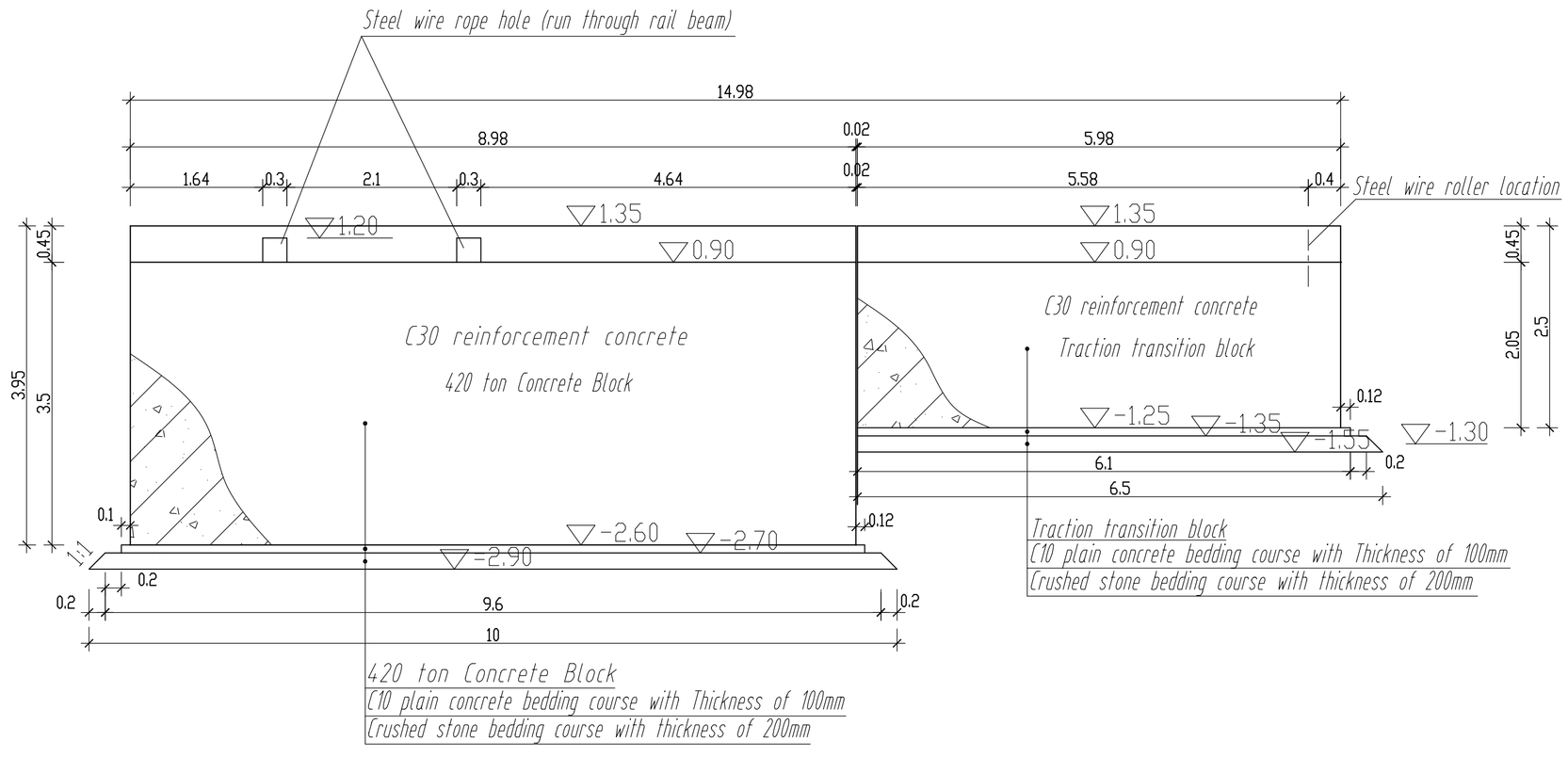

Section 1-1 of Traction Area Plan of Inclined Frame Vehicle

Note:
1.Dimensions and levels in drawings are in meters, levels are based on local seal level.
2.Steel wire roller (limitation wheel) shall be purchase by contractor and it shall meet the stress requirement of anchoring and resisting shear.
3.Steel wire roller (limitation wheel) and steel wire rope hole location shall be adjusted according to components dimension of pulley block and steel wire location.
4.Steel wire roller (limitation wheel arrangement) shall be composed by at least 12 limit wheels. The actual location shall be decided by shift direction of traction steel wire and technical process location as well as inclined frame vehicle.

Tianjin Port Engineering Design and Consulting Ltd of China Communication Construction Company

Principal of Project		Date	Project Name	Sudan Suakin Port International Container Terminal Phase1-Caisson Prefabricating Yard Project	Project NO.	GWY-08-110
Approved By		Date			Subdivision NO.	
Chief Designer		Date	Project Subjects		Phase	Shop Drawing
Checked By		Date			Scale	1:50
Corrected By		Date				
Designed By		Date	Drawing Name	Inclined Frame Vehicle Towing Area Structure Drawing	Drawing NO.	YZC-14
Plotted By		Date				